PNEUTREND®

Technical Details	Speed RPM	Spindle Size	Reversible or not	Chuck Cap. mm/inch	Length mm/inch	Weight kg/lb	Air Consumption LPM / CFM	Air Inlet inch	Noise (DB) LpA	Noise (DB) LwA	Uncertainty(DB) KpA	Uncertainty(DB) KwA	Vibration m/s²	Working Pressure Bar / PSI
33125	1800	3/8-24	X	10(3/8)	195(7.6)	0.9 (2.0)	99(3.5)	1/4	79.5	90.5	3	<2.5	6.3(90)	

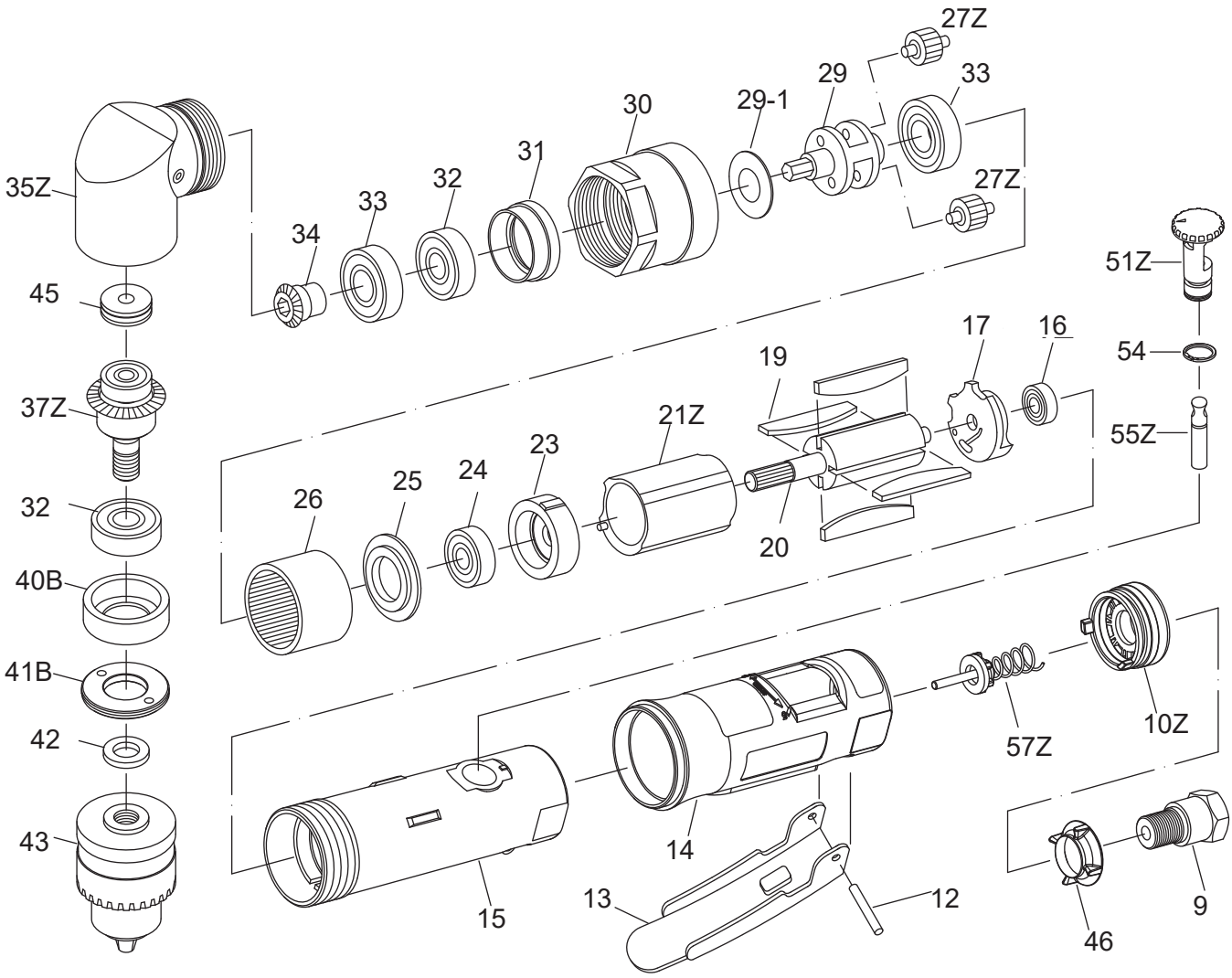

Index No.	Description	Quantity	Index No.	Description	Quantity	Index No.	Description	Quantity
09	AIR INLET	1	24	BEARING (608ZZ)	1	37Z	SHAFT SET	1
10Z	EXHAUST SLEEVE SET	1	25	WASHER	1	40B	BEARING BUSHING	1
12	SPRING PIN (3*24)	1	26	THRAD RING GEAR	1	41B	CLAMP NUT	1
13	LEVER	1	27Z	IDLER GEAR SET (16T)	2	42	WASHER	1
14	PROTECTING RUBBER	1	29	IDLER GEAR PLATE	1	43	3/8"CHUCK	1
15	HOUSING	1	29-1	WASHER	1	45	BEARING	1
16	BEARING (696ZZ)	1	30	CLAMP NUT	1	46	MUFFLER BODY	1
17	REAR PLATE	1	31	BEARING BUSHING	1	51Z	REGULATOR SET	1
19	ROTOR BLADE	4	32	BEARING (6000ZZ)	2	54	SNAP RING	1
20	ROTOR (9T)	1	33	BEARING (6001Z)	2	55Z	VALVE STEM SET	1
21Z	CYLINDER SET	1	34	BEVEL GEAR (15T)	1	57Z	VALVE SET	1
23	FRONT PLATE	1	35Z	ANGLE HOUSING SET	1			

* Due to our continuous improvement, all specifications are subject to change without prior notice.